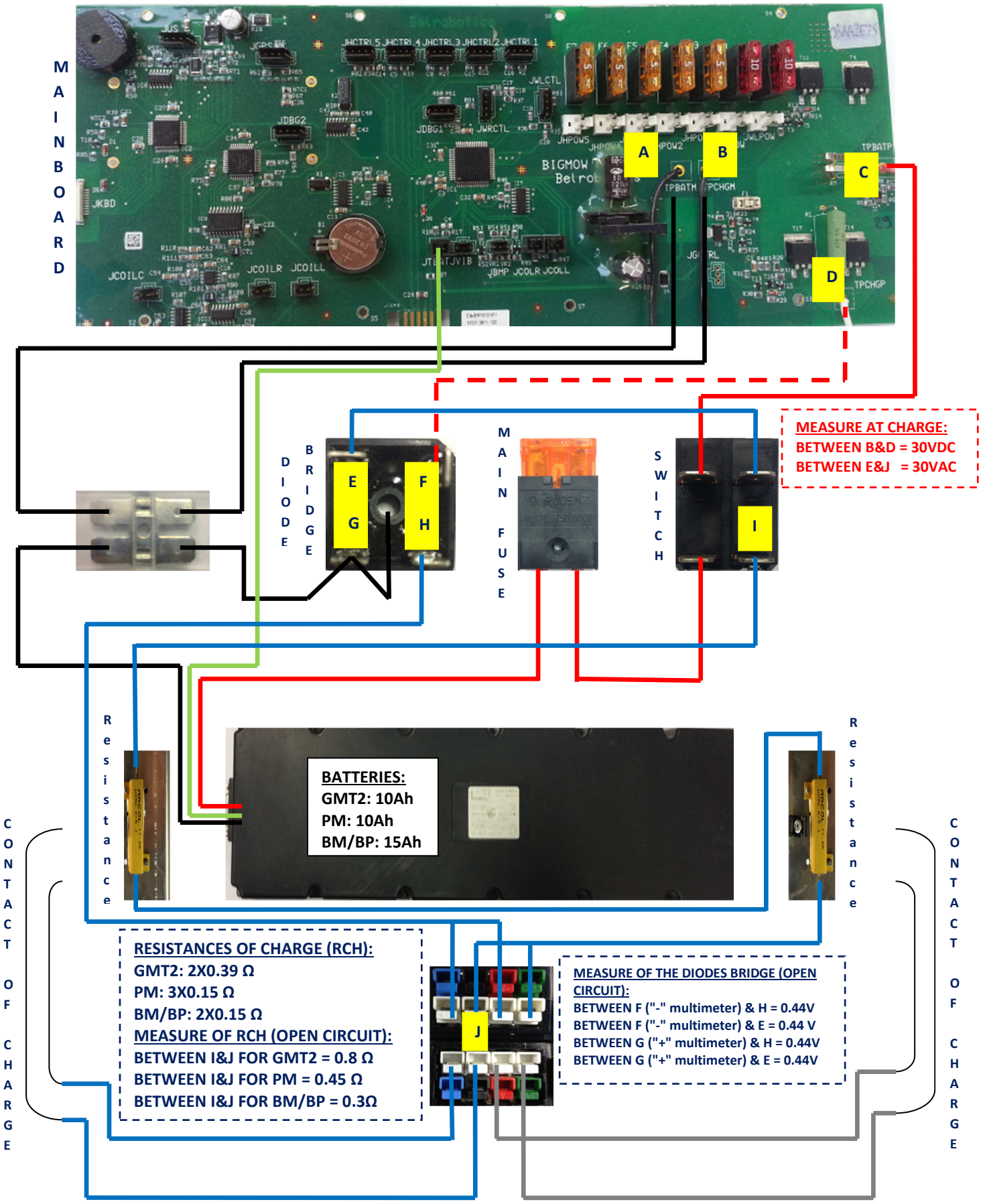Circuit of charge AC (Blue and Green card) ≤ 2012: